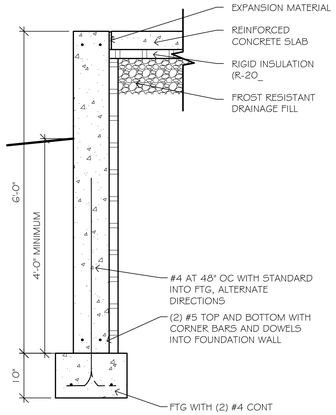

2 FOUNDATION (6' max)
3/4" = 1' - 0" LIMITED TO EAST AREAS WITH SLOPE

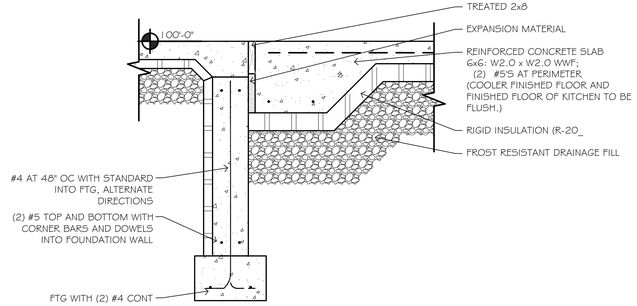

5 FOUNDATION (4')
3/4" = 1' - 0" TYPICAL

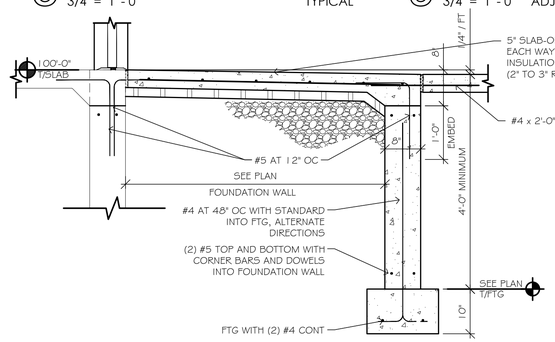

9 COOLER / FREEZER SLAB
3/4" = 1' - 0" ADJUST TOP OF FLOOR TO EQUIP.

6 STOOP
3/4" = 1' - 0" TYPICAL

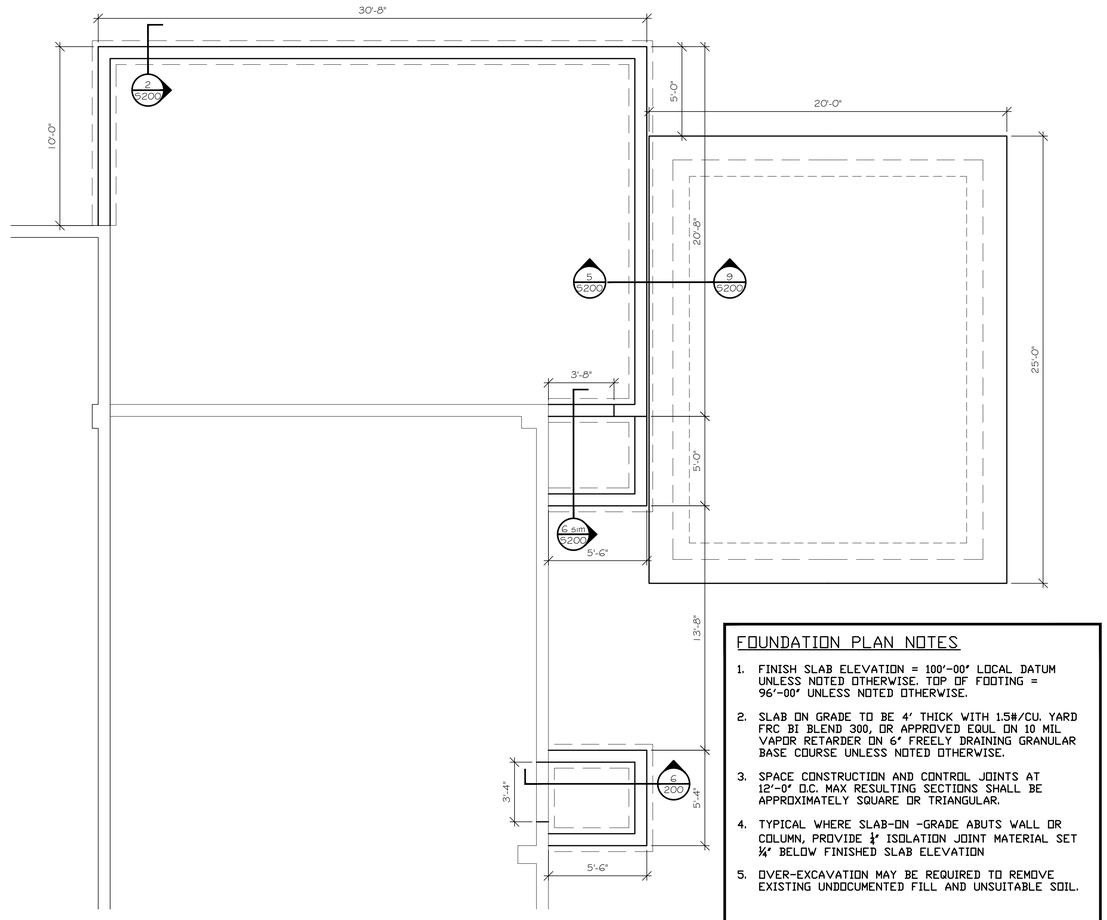

15 FOUNDATION PLAN
1/4" = 1' - 0"

NORTH

FOUNDATION PLAN NOTES

1. FINISH SLAB ELEVATION = 100'-00" LOCAL DATUM UNLESS NOTED OTHERWISE. TOP OF FOOTING = 96'-00" UNLESS NOTED OTHERWISE.
2. SLAB ON GRADE TO BE 4' THICK WITH 1.5#/CU. YARD FRC BI BLEND 300, OR APPROVED EQUL ON 10 MIL VAPOR RETARDER ON 6' FREELY DRAINING GRANULAR BASE COURSE UNLESS NOTED OTHERWISE.
3. SPACE CONSTRUCTION AND CONTROL JOINTS AT 12'-0" O.C. MAX RESULTING SECTIONS SHALL BE APPROXIMATELY SQUARE OR TRIANGULAR.
4. TYPICAL WHERE SLAB-ON -GRADE ABUTS WALL OR COLUMN, PROVIDE ½" ISOLATION JOINT MATERIAL SET ¼" BELOW FINISHED SLAB ELEVATION
5. OVER-EXCAVATION MAY BE REQUIRED TO REMOVE EXISTING UNDOCUMENTED FILL AND UNSUITABLE SOIL.

DIMENSION IV
Planning, Architectural Design, and Construction Administration
Incorporating the principles of Green Architecture and Sustainable Design
124 S. Broadway
Green Bay, WI 54303
Phone (920) 431-3444
Fax (920) 431-3445
www.dimension-iv.com
A Division of Idea House, Inc.

TENET
Farm to Table Restaurant / Market
2475 West Mason Street
Green Bay, WI 54303

Verify all existing site conditions.

REVISIONS:

SHEET INDEX:
FOUNDATION PLAN & DETAILS

Copyright © 2018 Idea House, Inc.

DRAWN	✓	APPRVD
DJR	djr	

MAY 22, 2018
MAY 31

S200

G714-S200 -16.dwg