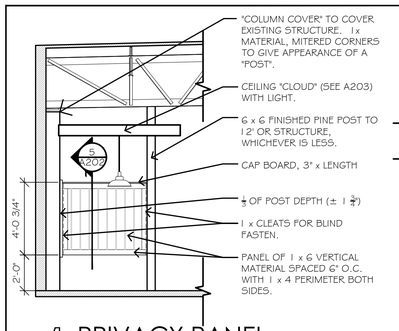

1 PRIVACY PANEL
1/4" = 1' - 0" SIMILAR IN ALL LOCATIONS

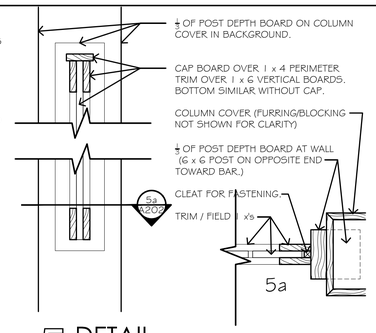

5 DETAIL
1 1/2" = 1' - 0" PRIVACY PANEL

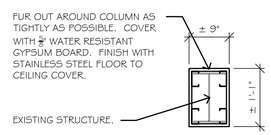

9 COLUMN COVER
3/4" = 1' - 0" KITCHEN COLUMN ONLY

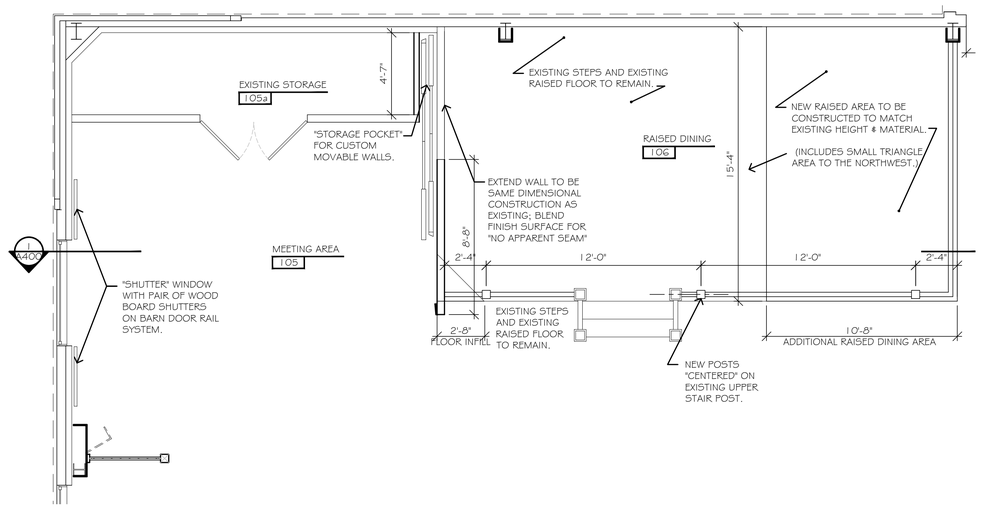

2 MEETING AREA AND RAISED DINING
1/4" = 1' - 0"

NORTH

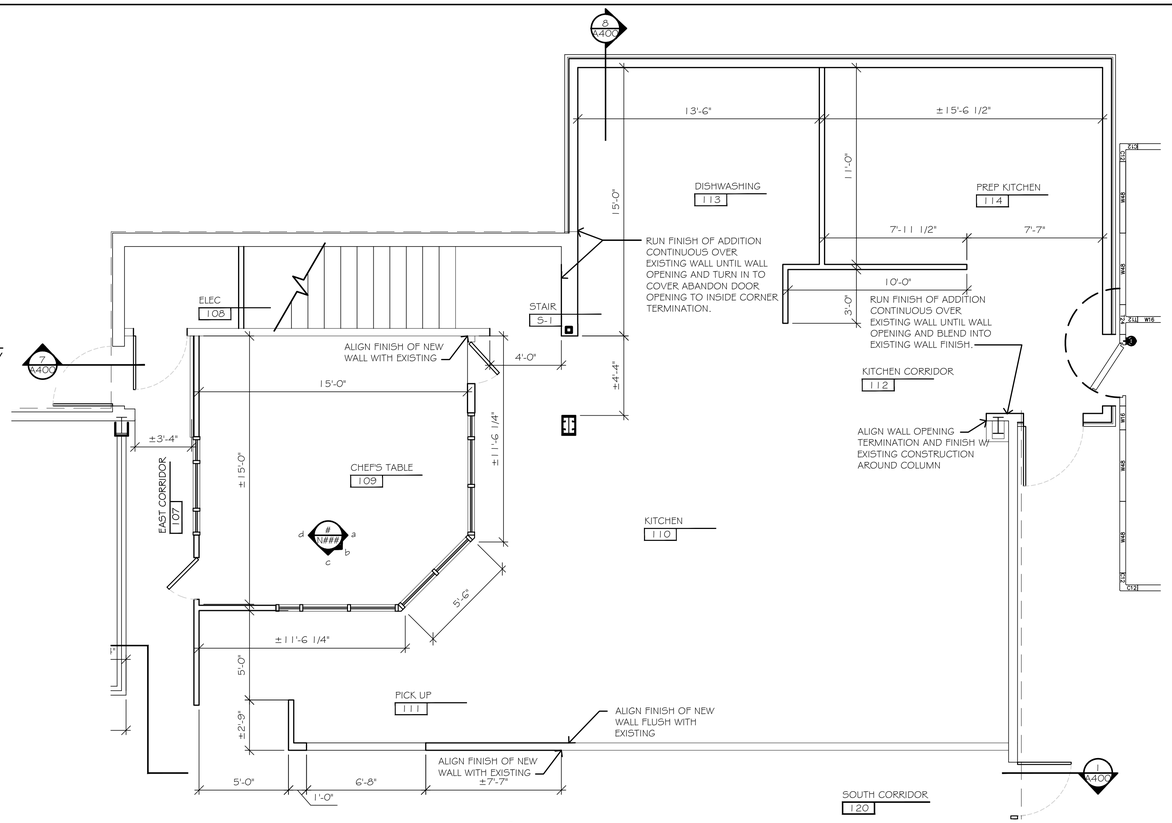

14 KITCHEN WALL PLAN
1/4" = 1' - 0" ADDITION AND RENOVATION

NORTH

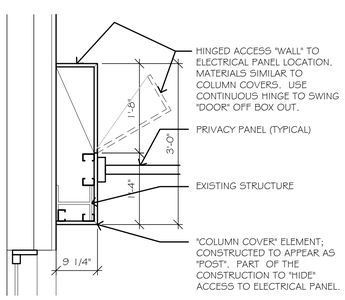

4 PANEL CABINET
3/4" = 1' - 0" FOR ELECTRICAL PANEL

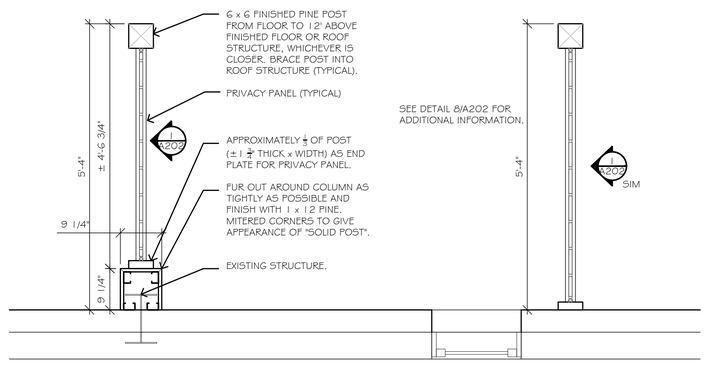

8 PRIVACY PANEL
3/4" = 1' - 0" @ BOXED OUT COLUMN (3x))

12 PRIVACY PANEL
3/4" = 1' - 0" @ WALL (6x)

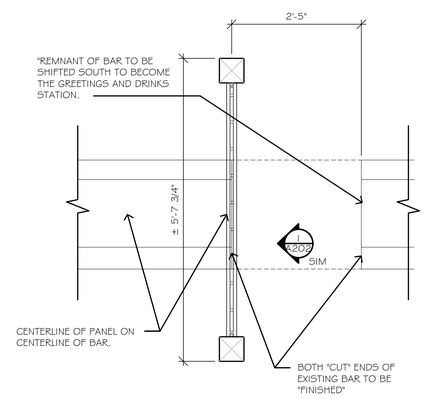

16 PRIVACY PANEL
3/4" = 1' - 0" @ COUNTER (1x)

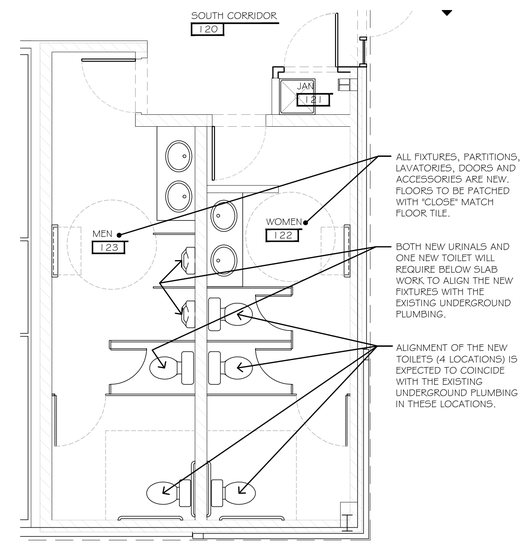

24 TOILET ROOM PLAN
1/4" = 1' - 0"

NORTH

DIMENSION IV
Planning, Architectural Design, and Construction Administration
Incorporating the principles of Green Architecture and Sustainable Design
124 S. Broadway
Green Bay, WI 54303
Phone (920) 431-3444
Fax (920) 431-3445
www.dimension-iv.com
A Division of Idea House, Inc.

TENET
Farm to Table Restaurant / Market
2475 West Mason Street
Green Bay, WI 54303

Verify all existing site conditions.

REVISIONS:

SHEET INDEX:
DETAIL PLANS & PLAN DETAILS

Copyright © 2018 Idea House, Inc.

DRAWN	APPRVD

MAY 22, 2018
JUNE 18, 2018

A202

G714-A202-96.dwg